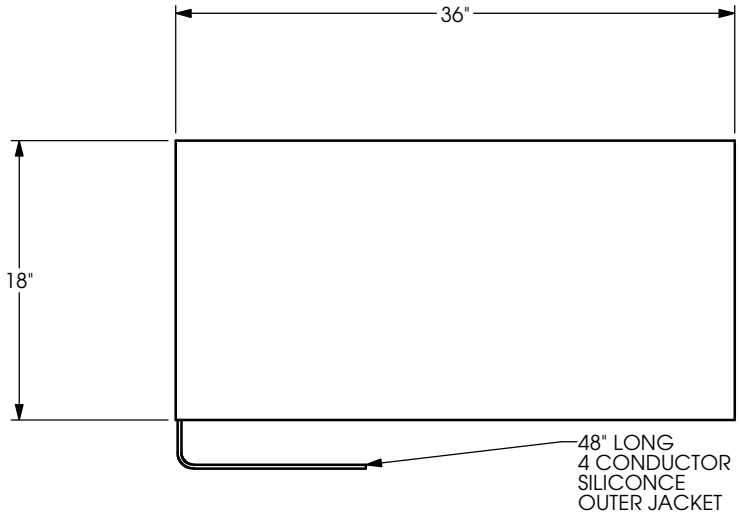


NOTES:

1. FOR 240V APPLICATION, IGNORE BLACK. AND WIRE POWER TO RED & BLUE.
2. FOR 120V APPLICATION, CONNECT POWER TO BLACK. RED & BLUE SHOULD BE JUMPERED TOGETHER FOR 2nd POWER LEAD.

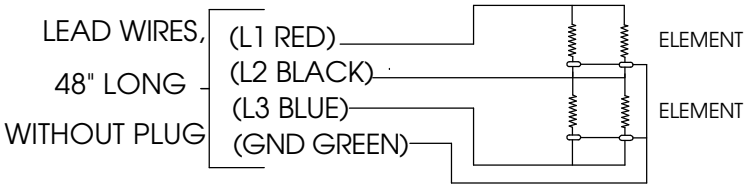


# WIRING DIAGRAM

| LEGEND | |
|---|---|
| CENT | CENTIPEDE |
| T/S | THERMOSTAT |
| T/C | THERMOCOUPLE |
| NS | NEAR SIDE |
| FS | FAR SIDE |
| VOLTS | 120/240 |
| WATTS | 1620 |
| AMPS | 13.50/6.75 |
| CUSTOMER PART #: | |
| DRAWING FILE LOCATION: | P:\Engineering\GLOBAL\VFS\DIST\P\PRT\-M1836DV PRT-M1836DV PATTERN REV 0.SLDDRW |

LAYERED CONSTRUCTION

TOP

CLOTH — CURED

HEATING ELEMENT

CLOTH — CURED

BOTTOM

DESIGN TEMPERATURE

REVISIONS

| NO. | BY | DATE | DESCRIPTION |
|---|---|---|---|
| | | | |

This document contains proprietaryinformation. Any information pertaining to this document is not to be reproduced, transmitted, disclosed or used otherwise on whole or in part without prior written authorization.

ORIGINAL SALES ORDER NUMBER: 330037

UNLESS OTHERWISE SPECIFIED, DIMENSIONAL TOLERANCE IS: FIT ± 1/8in FINISH ± 1/8in DO NOT SCALE DRAWING

SCALE: 1:4

| | | | |
|---|---|---|---|
| DRAWN: | SS | DATE: | 7/15/15 |
| TAPE: | SS | DATE: | 7/15/15 |
| BOM: | SS | DATE: | 7/17/16 |
| APPROVED: | LZ | DATE: | 7/28/15 |

**ProTherm**
**Industries, Inc.**
**3522 CENTRAL PIKE**
**BLDG. 203,**
**HERMITAGE, TN 37076**
**615-834-4044**

PROTHERM IND.
SRL HEATING BLANKET
WITH DV
18" X 36"

DRAWING NUMBER: **PRT-M1836DV**

SHEET 1 / 1

REVISION 0