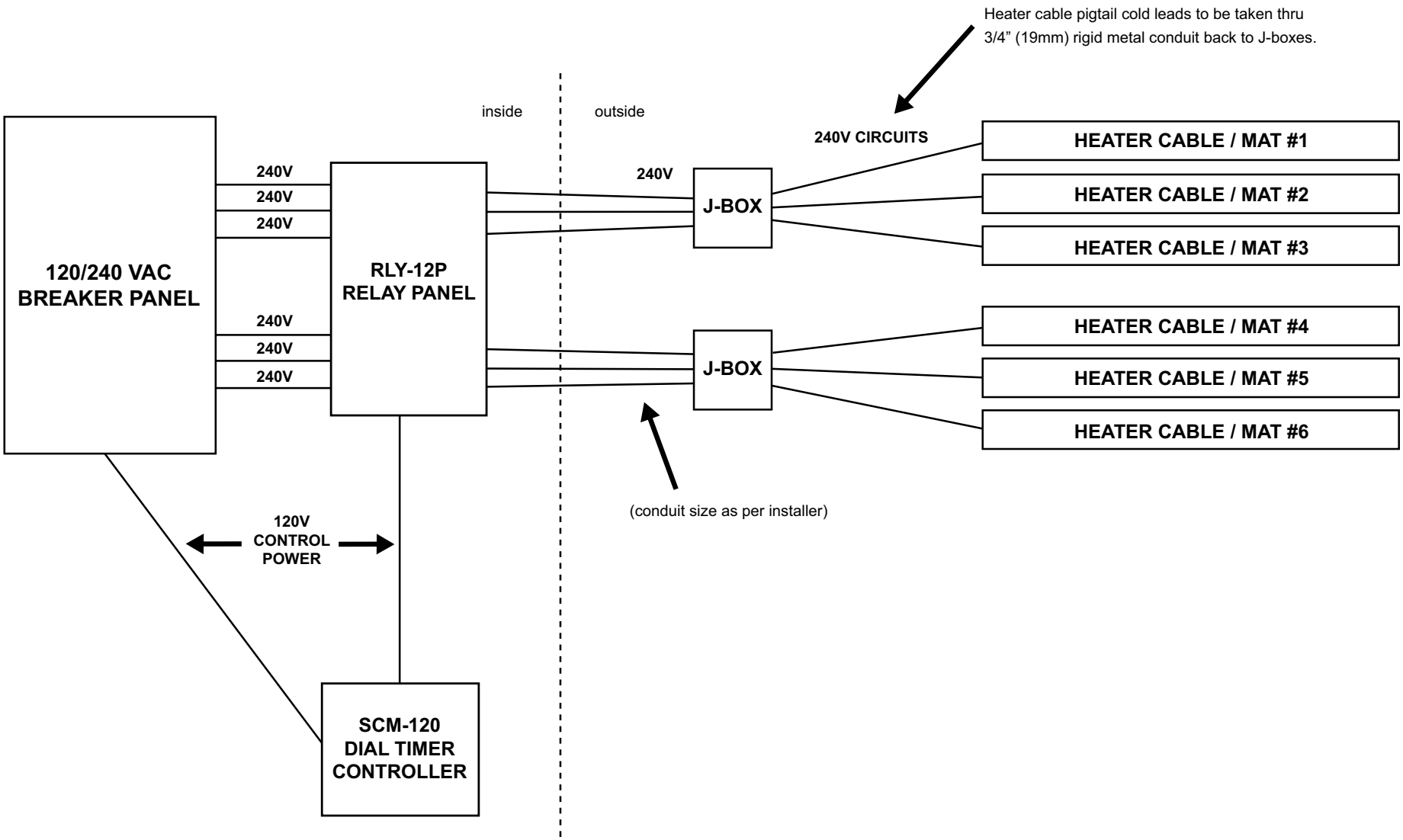SNOW MELT DIAGRAM: 240V - TYPICAL LINE DIAGRAM (FOR 6 CIRCUITS/CABLES) WITH MANUAL CONTROL